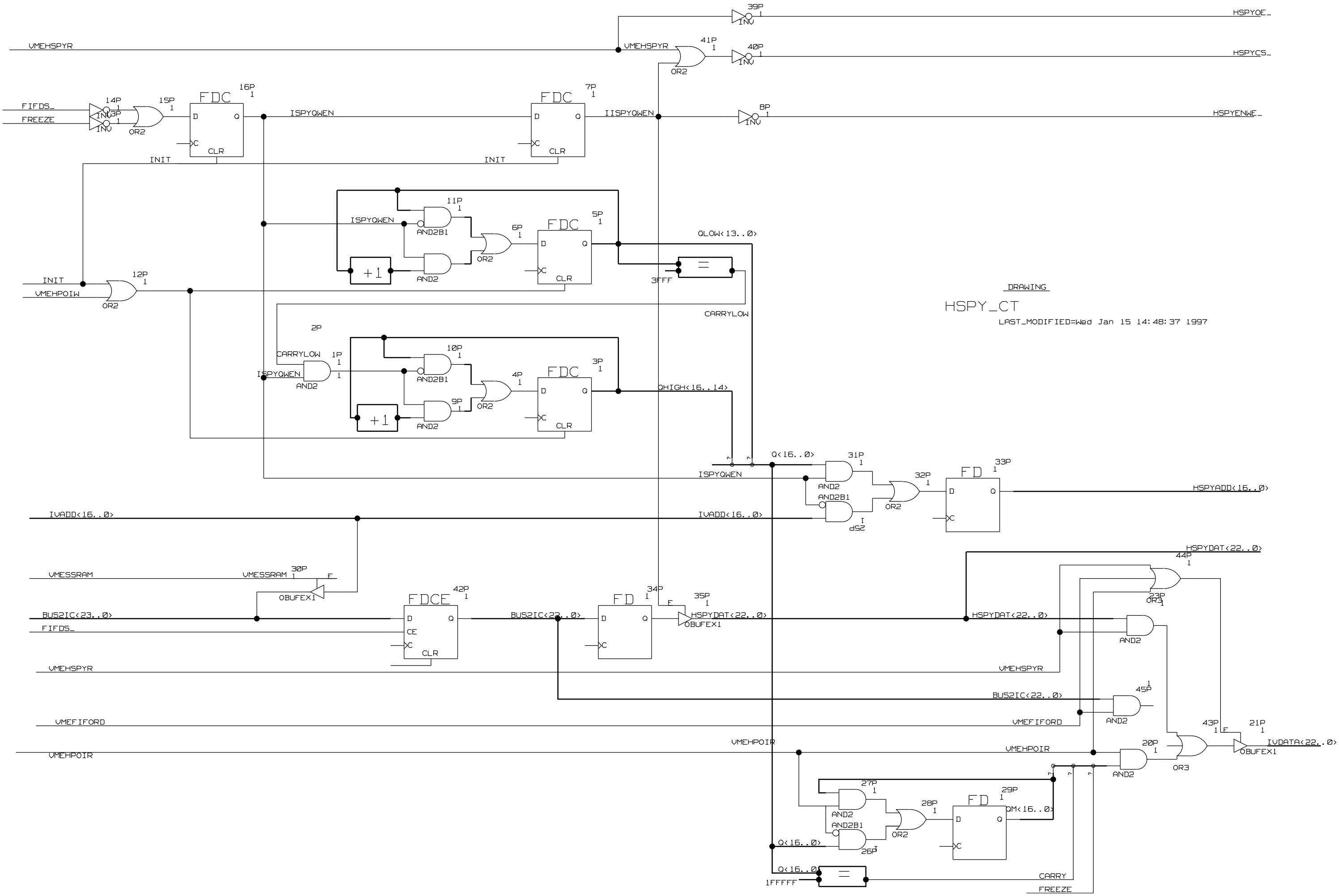

DRAWING
HSPY_CT
LAST_MODIFIED=Wed Jan 15 14:48:37 1997
VMEHSPYR
HSPYOE_
HSPYCS_
FIFDS_
FREEZE
ISPYQWEN
IISPYQWEN
HSPYENWE_
INIT
QLOW<13..0>
3FFF
CARRYLOW
VMEHPOIW
QHIGH<16..14>
Q<16..0>
HSPYADD<16..0>
IVADD<16..0>
HSPYDAT<22..0>
VMESSRAM
BUS2IC<23..0>
BUS2IC<22..0>
VMEFIFORD
VMEHPOIR
IVDATA<22..0>
QM<16..0>
1FFFFF
CARRY
FREEZE