INPUT XEPLD BLOCK DIAGRAM. CORRESPONDS TO FIFO_CTR.ABL FIFO_REG.ABL EE_REG.ABL AND PARITY.PLD (VME_REG.ABL NOT INCLUDED). TIME FLOWS LEFT TO RIGHT
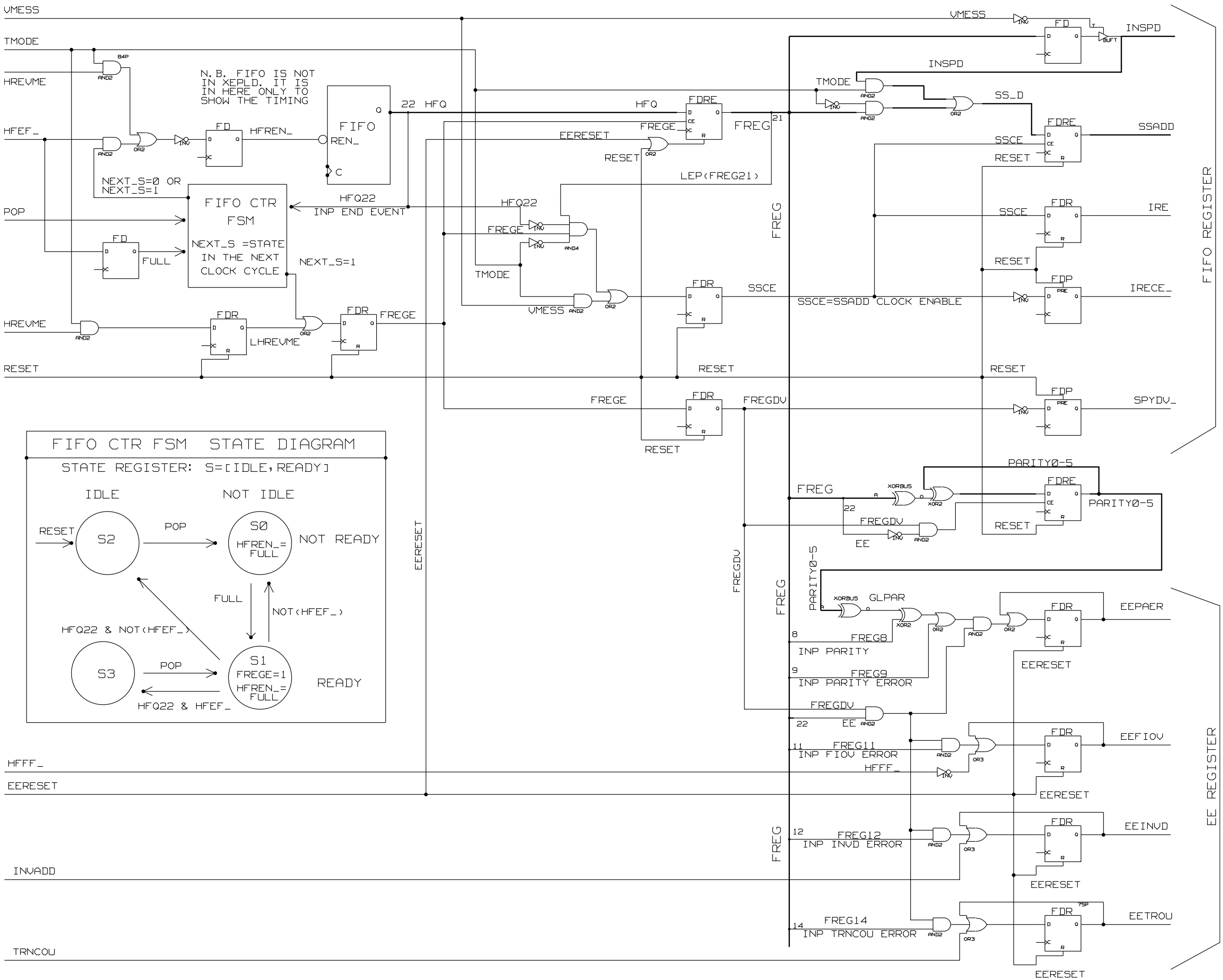
DRAWING
Tue Oct 15 11:20:10 1996