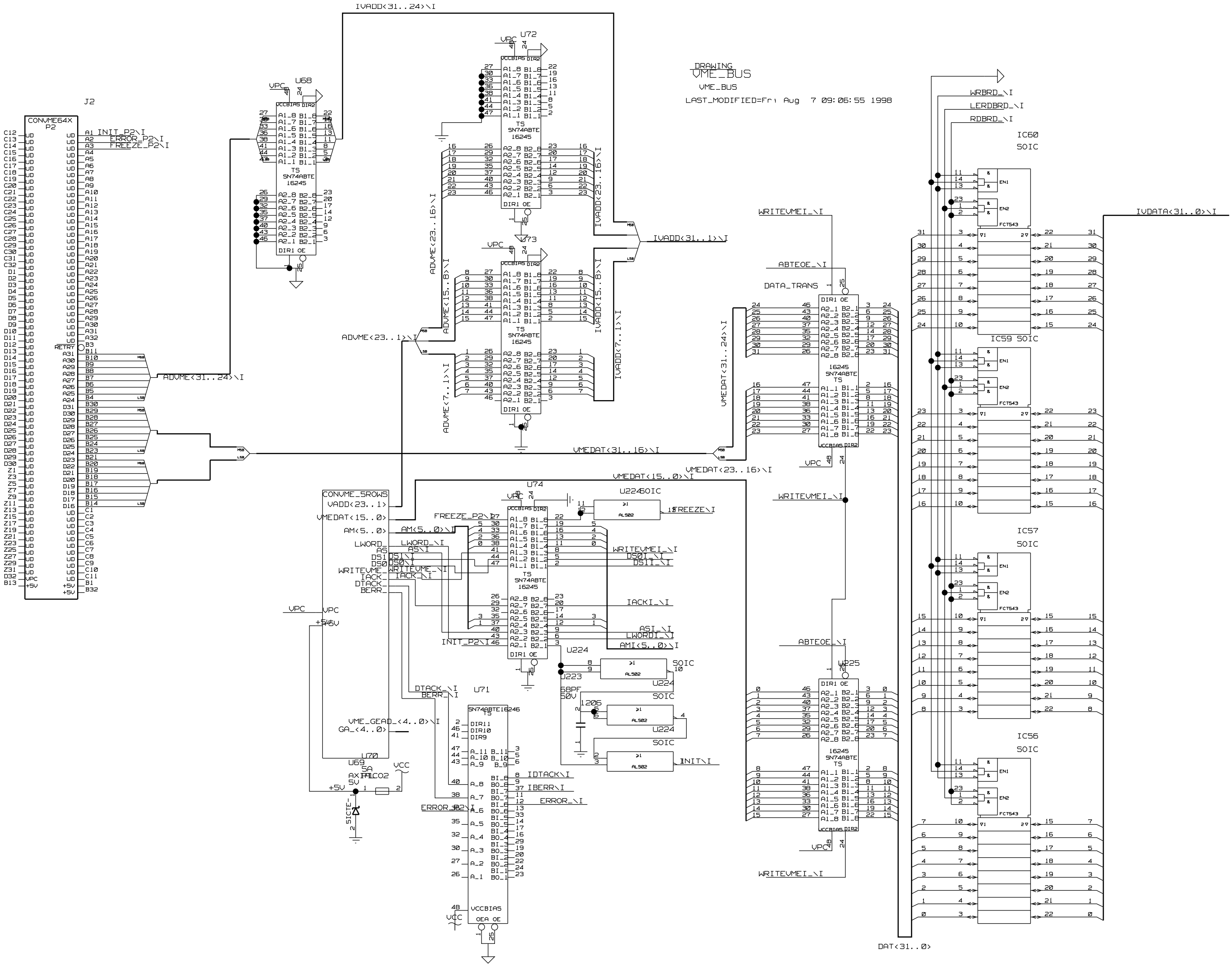
DRAWING
VME_BUS
VME_BUS
LAST_MODIFIED=Fri Aug 7 09:06:55 1998
J2
CONVME64X
P2
INIT_P2\I
ERROR_P2\I
FREEZE_P2\I
RETRY
ADVME<31..24>\I
IVADD<31..24>\I
U68
U72
U73
U74
U71
U70
U69
U224
U225
U223
TS
SN74ABTE
16245
DIR1 OE
ADVME<23..16>\I
ADVME<15..8>\I
ADVME<7..1>\I
IVADD<23..16>\I
IVADD<15..8>\I
IVADD<7..1>\I
IVADD<31..1>\I
ADVME<23..1>\I
VMEDAT<31..16>\I
VMEDAT<23..16>\I
VMEDAT<15..0>\I
VMEDAT<31..24>\I
WRITEVMEI_\I
ABTEOE_\I
DATA_TRANS
WRBRD_\I
LERDBRD_\I
RDBRD_\I
IC60
SOIC
IC59 SOIC
IC57
SOIC
IC56
SOIC
IVDATA<31..0>\I
DAT<31..0>
CONVME_5ROWS
VADD<23..1>
VMEDAT<15..0>
AM<5..0>
LWORD_
AS
DS1
DS0
WRITEVME_
IACK_
DTACK_
BERR_
FREEZE_P2\I
AM<5..0>\I
LWORD_\I
AS\I
DS1\I
DS0\I
WRITEVME_\I
IACK_\I
WRITEVMEI_\I
DS0I_\I
DS1I_\I
IACKI_\I
ASI_\I
LWORDI_\I
AMI<5..0>\I
INIT_P2\I
DTACK_\I
BERR_\I
VME_GEAD_<4..0>\I
GA_<4..0>
IDTACK\I
IBERR\I
ERROR_\I
ERROR_P2\I
INIT\I
FREEZE\I
SOIC
68PF
50V
1206
AXIAL
5A
5V
VCC
VPC
+5V
5ICTE-